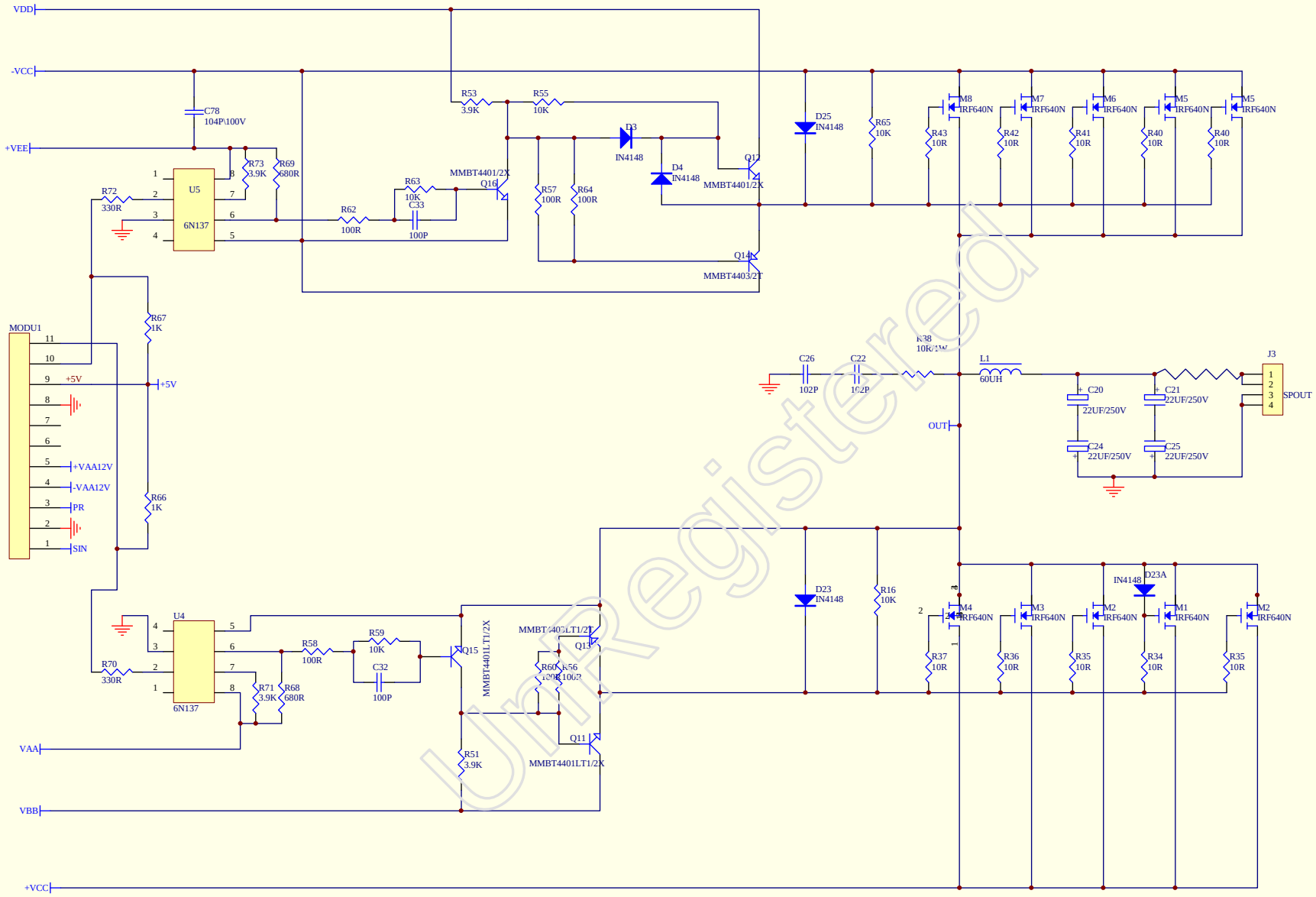

Unregistered

Title	QA2000 Amplifier unit	
Size A3	Number	Revision
Date: 24-Jul-2013	Sheet of	
File: E:\works\123\111\D\新建文件夹 (4)\QA-2000\Sch\功放电路图.DDB	Drawn By:	